

PRESS BALL AND PERFORM PRESSURE CHECK PER LATEST REVISON OF WORK INSTRUCTION 605-21-100

SECTION A-A

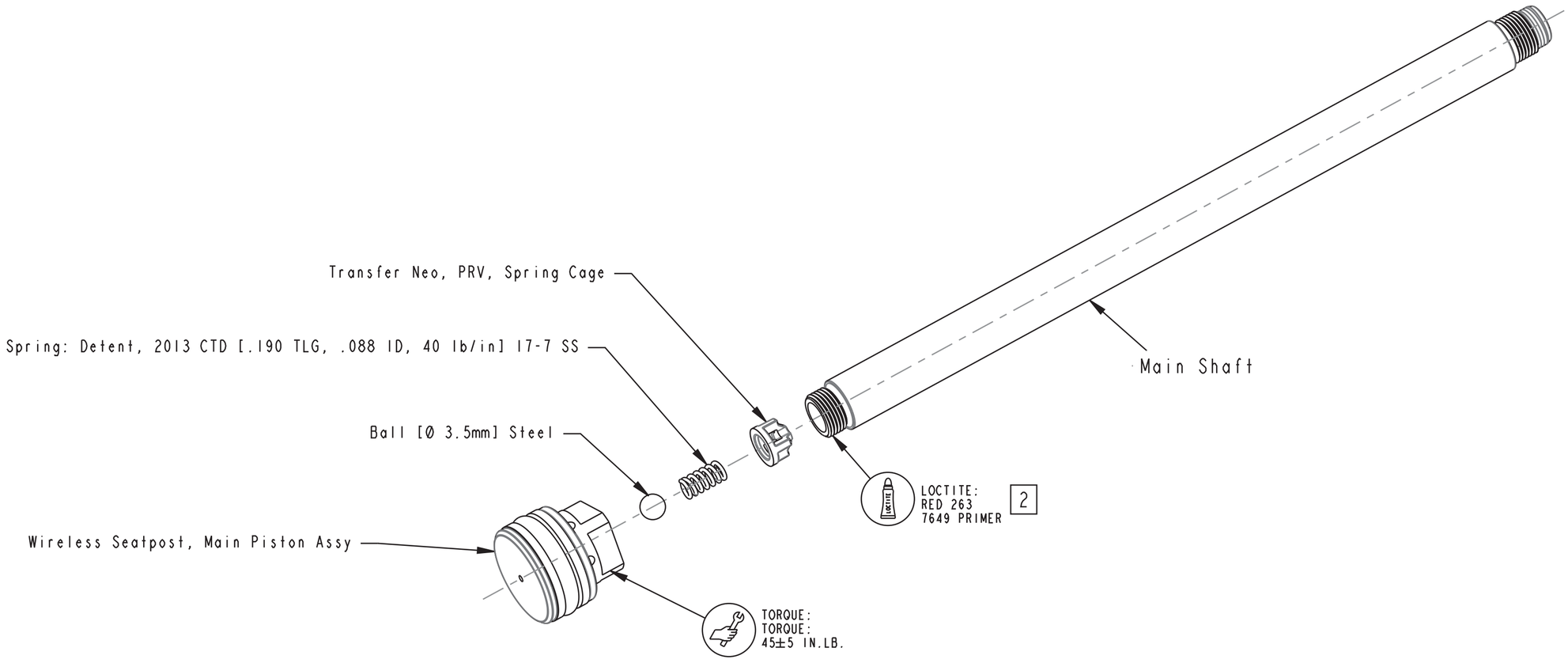

2 LOCTITE SHOULD BE APPLIED WITH CARE TO PREVENT EXCESS LOCTITE FROM CONTAMINATING THE PRV ASSEMBLY.

- PROPRIETARY-
THIS DOCUMENT CONTAINS CONFIDENTIAL, PROPRIETARY INFORMATION THAT IS FOX PROPERTY. DO NOT DISCLOSE TO OR DUPLICATE FOR OTHERS EXCEPT AS AUTHORIZED BY FOX.

FOX Factory, Inc.
130 Hangar Way, Watsonville, CA 95076 USA
Ph 831-768-1100
Fax 831-768-9312

TITLE
Assy Dwg, Transfer Neo, Shaft Assy

SIZE C | DWG. NO.

PLOT SCALE 2:1 | SHEET 1 OF 1

ProE ASSEM